DocuSign Envelope ID: 52C584D7-816D-4637-9F89-EFE5CCFFE479

PROJECT REFERENCE NO.	SHEET NO.
B-6035	2A-1
R/W SHEET NO.	
ROADWAY DESIGN ENGINEER	PAVEMENT DESIGN ENGINEER
NORTH CAROLINA PROFESSIONAL SEAL 26960 ENGINEER M. SCHULER DocuSigned by: Rick M. Schuler 12/17/2021	NORTH CAROLINA PROFESSIONAL SEAL 26960 ENGINEER M. SCHULER DocuSigned by: Rick M. Schuler 12/17/2021

DOCUMENT NOT CONSIDERED FINAL UNLESS ALL SIGNATURES COMPLETED

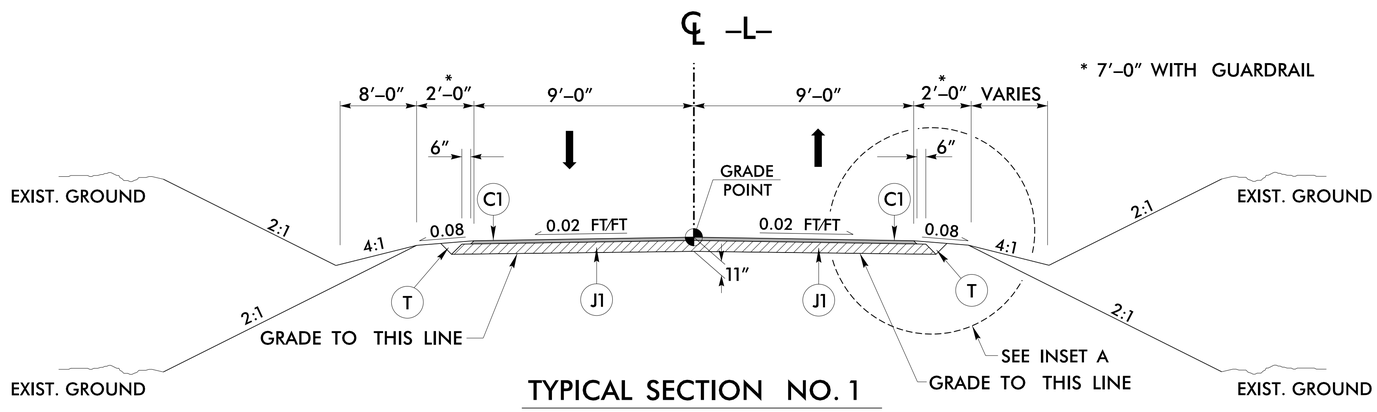

TYPICAL SECTION NO. 1

–L– STA. 10+50.00 TO –L– STA. 11+43.95 (BEGIN BRIDGE)
–L– STA. 12+16.67 (END BRIDGE) TO –L– STA. 12+90.00

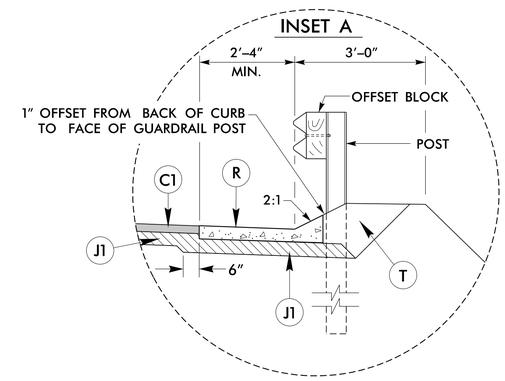

INSET A

END BRIDGE TO –L– STA. 12+80.88 RT

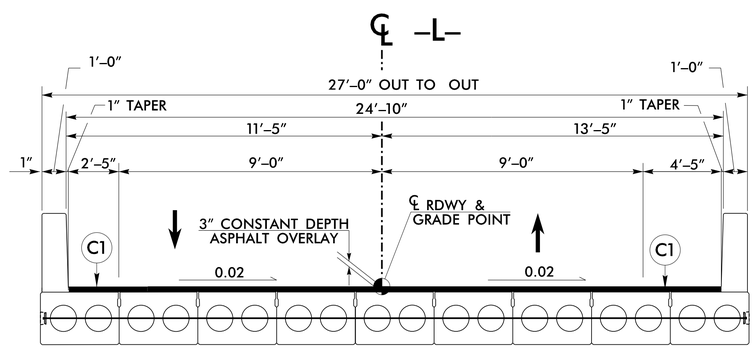

TYPICAL SECTION NO. 2

TYPICAL SECTION NO. 2

–L– STA. 11+43.95 (BEGIN BRIDGE) TO –L– STA. 12+16.67 (END BRIDGE)

PAVEMENT SCHEDULE	
C1	PROP. APPROX. 3" ASPHALT CONCRETE SURFACE COURSE, TYPE S9.5B, AT AN AVERAGE RATE OF 168 LBS. PER SQ. YD. IN EACH OF TWO LAYERS.
J1	PROP. 8" AGGREGATE BASE COURSE
R	SHOULDER BERM GUTTER
T	EARTH MATERIAL
DRAWING NOT TO SCALE	

NOTE: ALL PAVEMENT SLOPES ARE 1:1 UNLESS SHOWN OTHERWISE.

8/17/99
12/16/2021 11:37:30 AM
...\Proj_Jackson203_rdy_typ.dgn
User:pam.hizon-rpk